SERVICE MANUAL

INTEGRATED STEREO AMPLIFIER

SANSUI AU-519

Sansui

SANSUI ELECTRIC CO., LTD.

SPECIFICATIONS

Power output
Min. RMS, both channels driven, from 10 to 20,000 Hz, with no more than 0.008 % total harmonic distortion.
70 watts per channel into 8 ohms

Load impedance . . . . 8 ohms

Total harmonic distortion (POWER AMP IN)
. . . . . less than 0.008 % at or below rated min. RMS power output

Intermodulation distortion (70 Hz : 7 kHz = 4:1 SMPTE method) (POWER AMP IN)
. . . . . less than 0.008 % at or below rated min. RMS power output

Rise time . . . . . 0.5 μsec

Slew rate . . . . . 160 V/μsec

Frequency response (at 1 watt) (POWER AMP IN)
. . . . . DC to 400,00Hz +0 dB −3 dB

Damping factor (1 kHz, both channels driven)
. . . . . 100 into 8 ohms

RIAA curve deviation (PHONO, 20 Hz to 20 kHz)
. . . . . +0.2 dB, −0.2 dB

Input sensitivity and impedance (1 kHz, for rated power output)
PHONO-1, 2 . . . . 2.5 mV/47 kilohms
(Max. input capability; 300 mV at 1 kHz, less than 0.01 % total harmonic distortion)
AUX, TUNER, TAPE PLAY
. . . . . 150 mV/47 kilohms
POWER AMP IN . . 1 V/47 kilohms

Output level and impedance (1,000 Hz)
TAPE REC. . . . . 150 mV into 47 kilohms/600 ohms
PREAMP OUT . . . 1 V into 47 kilohms/400 ohms

Channel separation (1 kHz, at rated power output)
PHONO-1, 2 . . . . 70 dB
AUX, TUNER, TAPE PLAY
. . . . . 75 dB

Hum and noise (short-circuit, A-network)
PHONO-1, 2 . . . . 88 dB
AUX, TUNER, TAPE PLAY
. . . . . 100 dB

Controls
BASS . . . . . ±10 dB (50 Hz)
TREBLE . . . . . ±10 dB (15 kHz)
SUBSONIC . . . . . −3 dB (16 Hz), 6 dB/oct
LOUDNESS (VOLUME control: −30 dB position)
. . . . . 10 dB at 50 Hz
8 dB at 10 kHz

Power requirements
Power voltage . . . . 100, 120, 220, 240 V (50/60 Hz)
For U.S.A. & Canada
. . . . . 120 V (60 Hz)
Power consumption
Maximum consumption
. . . . . 580 watts
Rated consumption
. . . . . 360 watts 440 VA

Dimensions . . . . . 430 mm (16-15/16") W
168 mm (6-5/8") H
390 mm (15-3/8") D

Weight . . . . . 15.6 kg (34.4 lbs) net
18.0 kg (39.7 lbs) packed

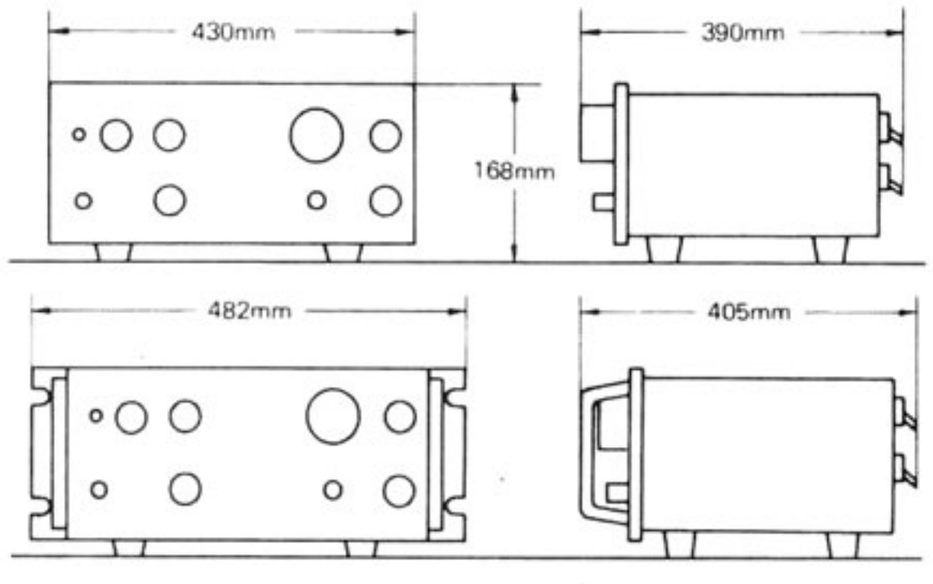

* Design and specifications subject to changes without notice for improvements.
* In order to simplify the explanation illustrations may sometimes differ from the originals.

1. BLOCK DIAGRAM

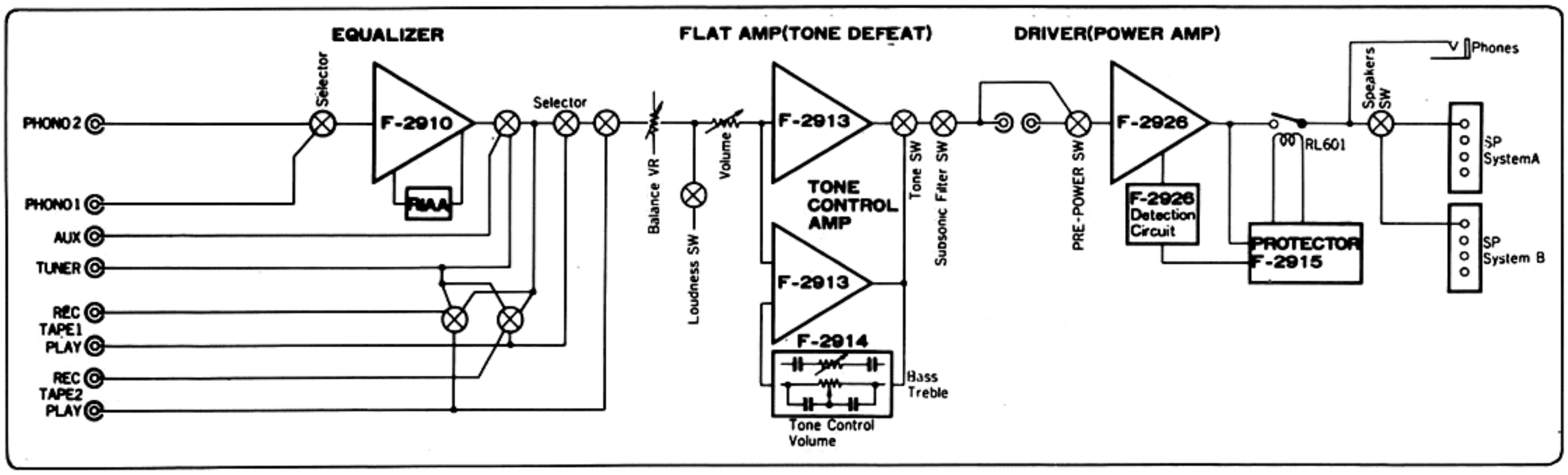

◇ Power Section/Operation Block Diagram

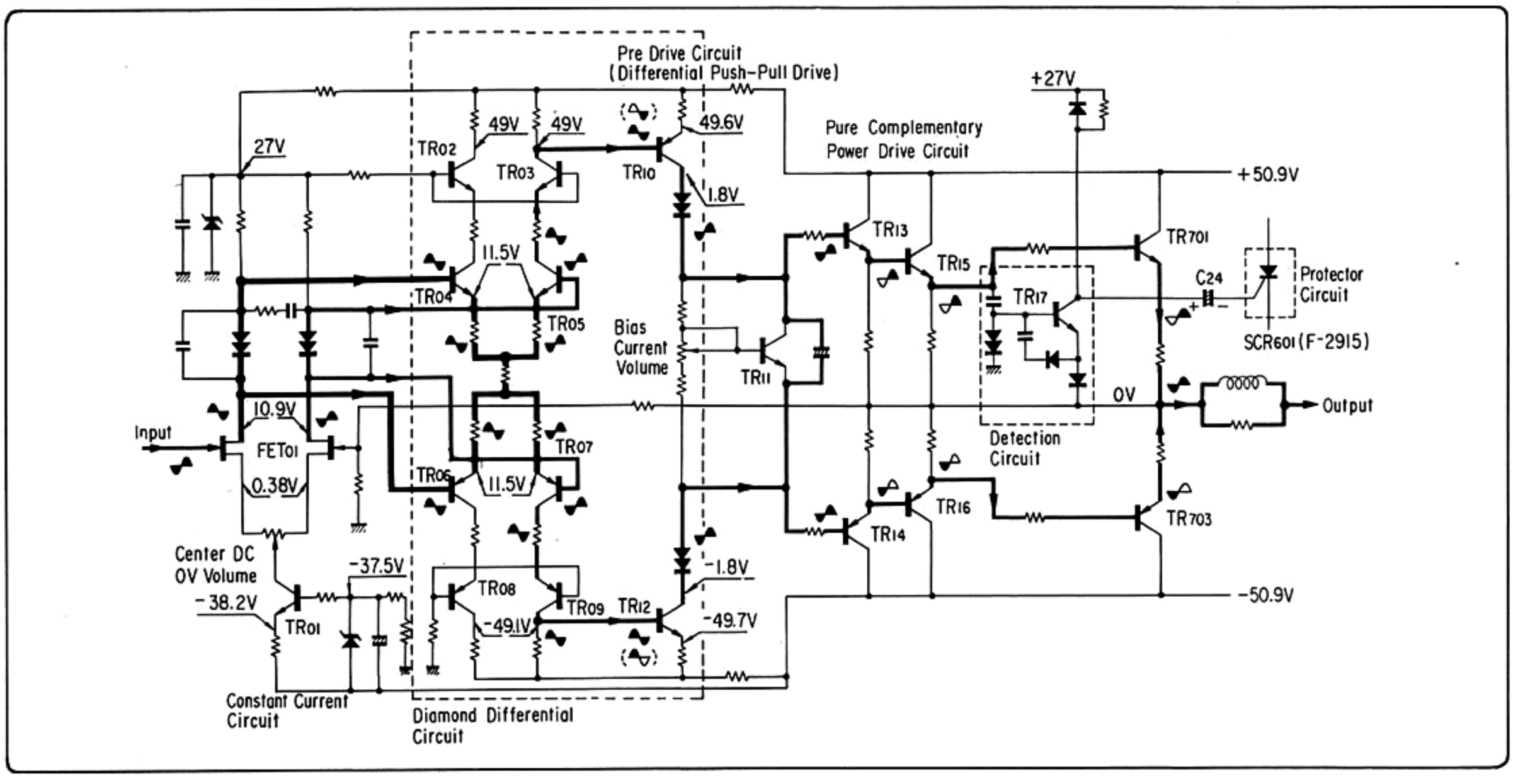

2. ADJUSTMENTS

Notes: 1. Mastar Volume . . . . . Minimum
2. Room Temperature . . . . . 18°C ~ 28°C (65°F ~ 83°F)
3. When replacing some parts or circuit board, refer to description in REMARKS.
4. For this adjustment, run the unit for more than 3 minutes after the power is switched ON.

2-1. Driver Circuit Adjustment (See Fig. 2-1, 2-3)

* Perform after removing bonnet.

STEP	SUBJECT	MEASURE OUTPUT	ADJUST	ADJUST FOR	REMARKS
1	DC 0V Adj. L-CH	Speaker terminal	VR01 F-2926	DC 0V ±5 mV	Before turning ON power switch, set VR01 to center position.
2	DC 0V Adj. R-CH	Speaker terminal	VR01 F-2927		
3	Bias current Adj. L-CH	Between emitters of power transistors, TR701, & TR703 (between T.P Pin in Fig. 2-1)	VR02 F-2926	DC 20 mV ±1 mV	• Before turning ON power switch, turn VR02 fully counterclockwise. This bias current adjustment converts current value into voltage by Ohm's law.
4	Bias current Adj. R-CH	Between emitters of power transistors, TR702 & TR704 (between T.P Pin in Fig. 2-1)	VR02 F-2927		

2-2. F-2910 Equalizer Circuit Adjustment (See Fig. 2-4)

* Perform after removing bonnet.

STEP	SUBJECT	MEASURE OUTPUT	ADJUST	ADJUST FOR	REMARKS
1	DC 0V Adj. L-CH	Between GND & common joint of emitter resistor R49, R51 (R49 → TR13, R51 → TR15)	VR01 F-2910	DC 0V ±50 mV	Before turning ON power switch, set VR01 & VR02 to center position.
2	DC 0V Adj. R-CH	Between GND & common joint of emitter resistor R50, R52 (R50 → TR14, R52 → TR16)	VR02 F-2910		

2-3. F-2913 Flat Amp Circuit Adjustment (See Fig. 2-2, 2-5)

* Perform after removing bonnet & bottom plate.

STEP	SUBJECT	MEASURE OUTPUT	ADJUST	ADJUST FOR	REMARKS
1	DC 0V Adj. L-CH	Between chassis and collector connecting point of TR09 & TR11	VR03 F-2913	DC 0V ±10 mV	Before turning ON power switch, set VR03 & VR04 to center position.
2	DC 0V Adj. R-CH	Between chassis and collector connecting point of TR10 & TR12	VR04 F-2913		

Fig. 2-1 Driver Amp Circuit Board (F-2926, F-2927)

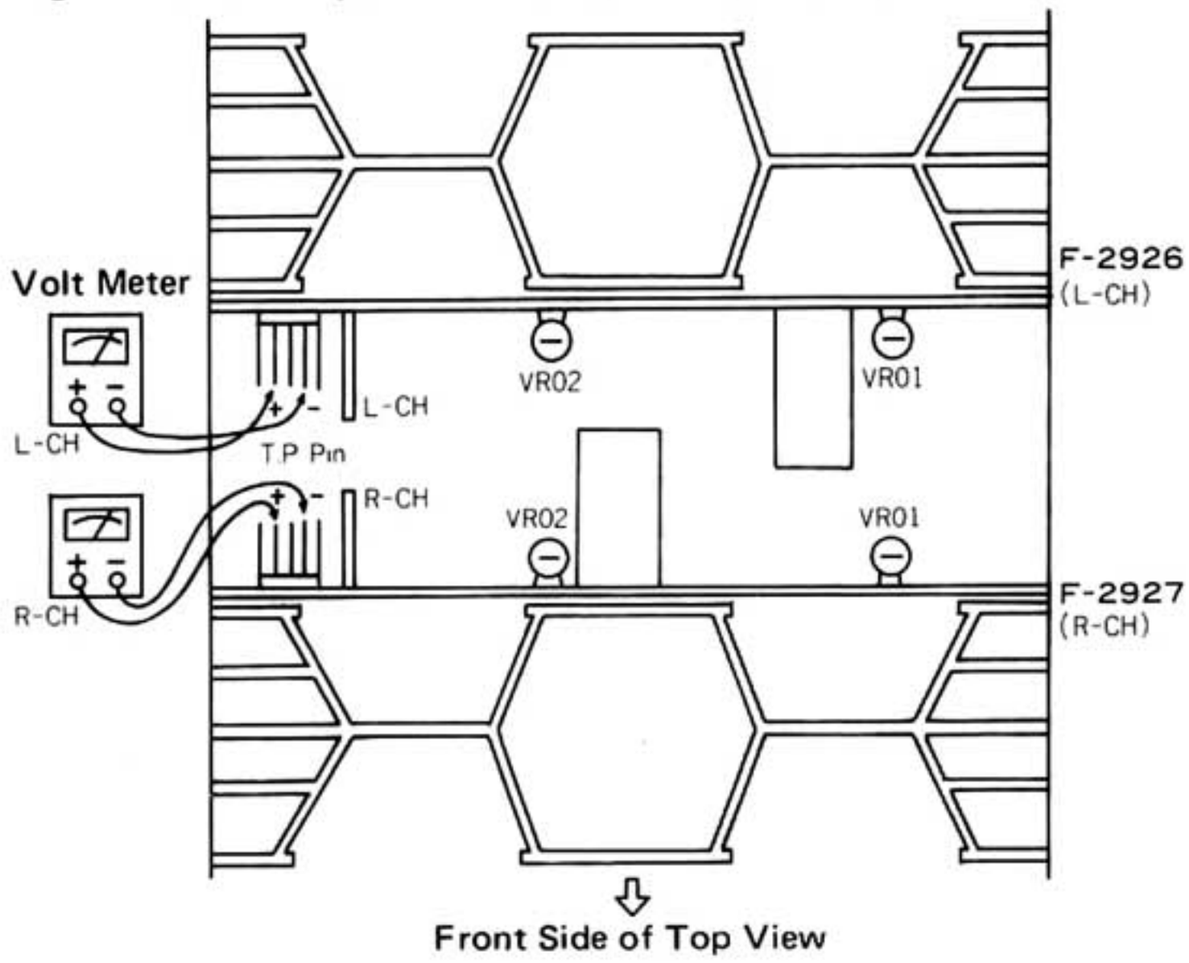

Fig. 2-2 Flat Amp Circuit Board (F-2913)

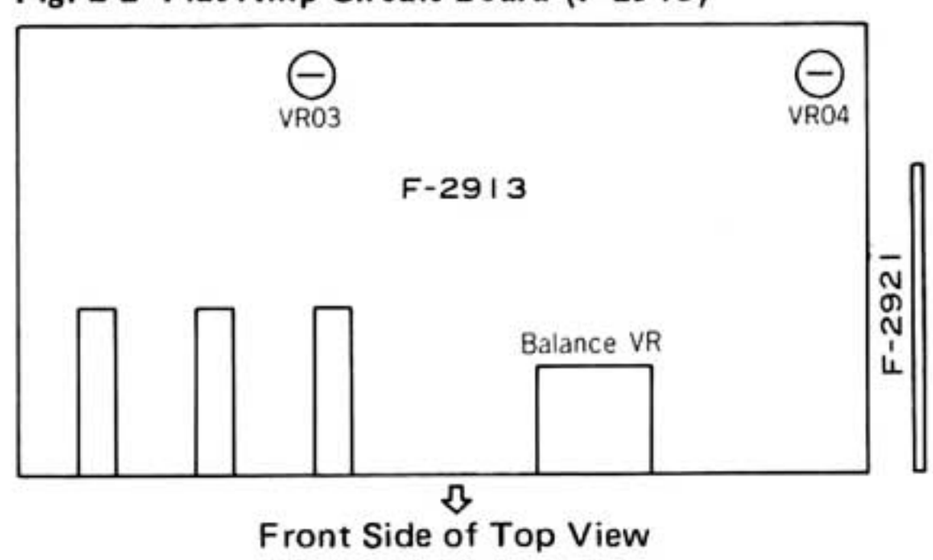

Fig. 2-3 SPEAKER TERMINAL

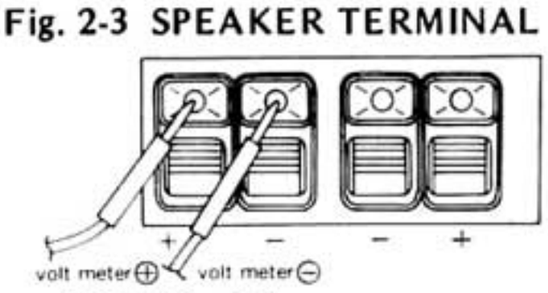

(DC 0V adj.)

Fig. 2-4 Equalizer Circuit Board (F-2910)

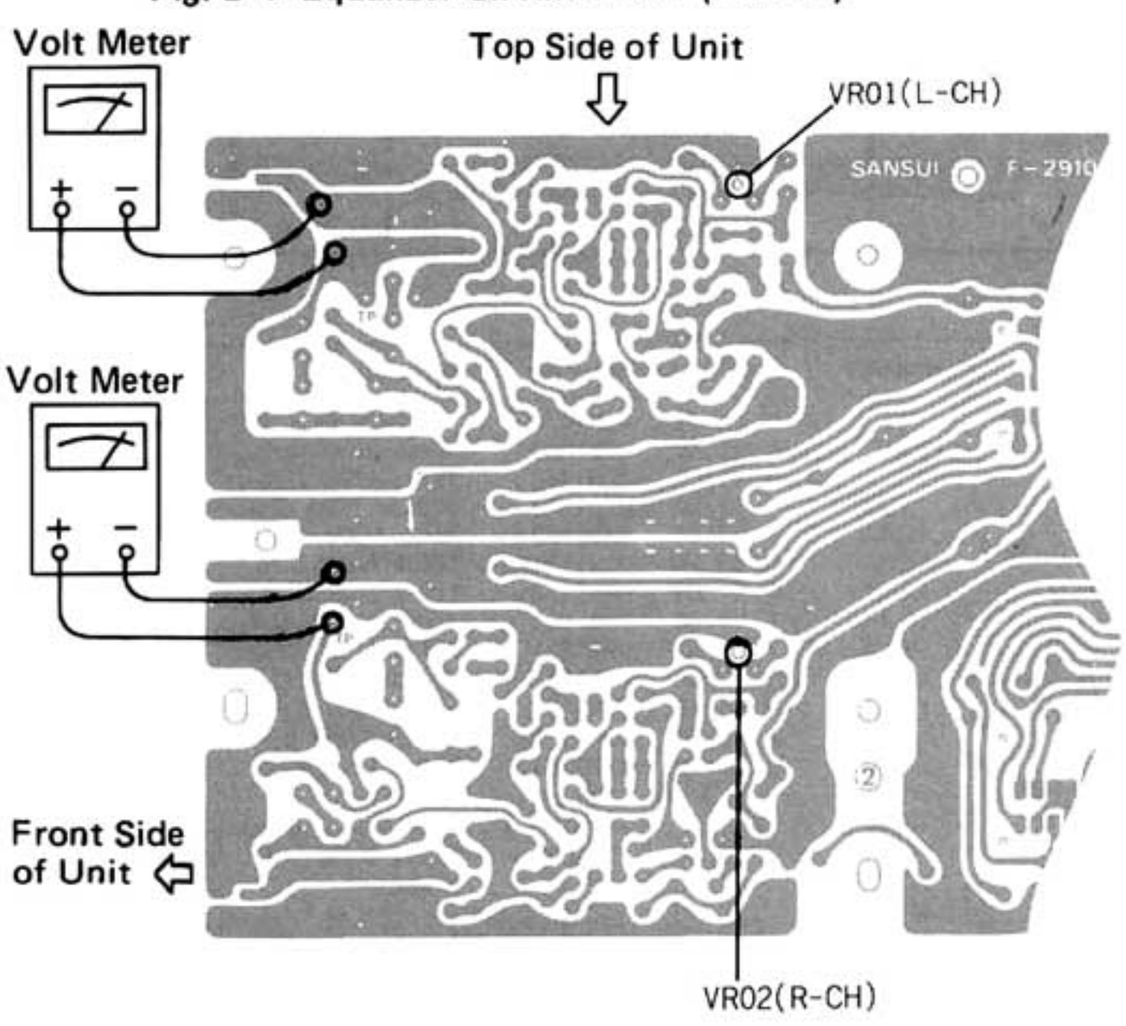

Fig. 2-5 Flat Amp Circuit Board (F-2913)

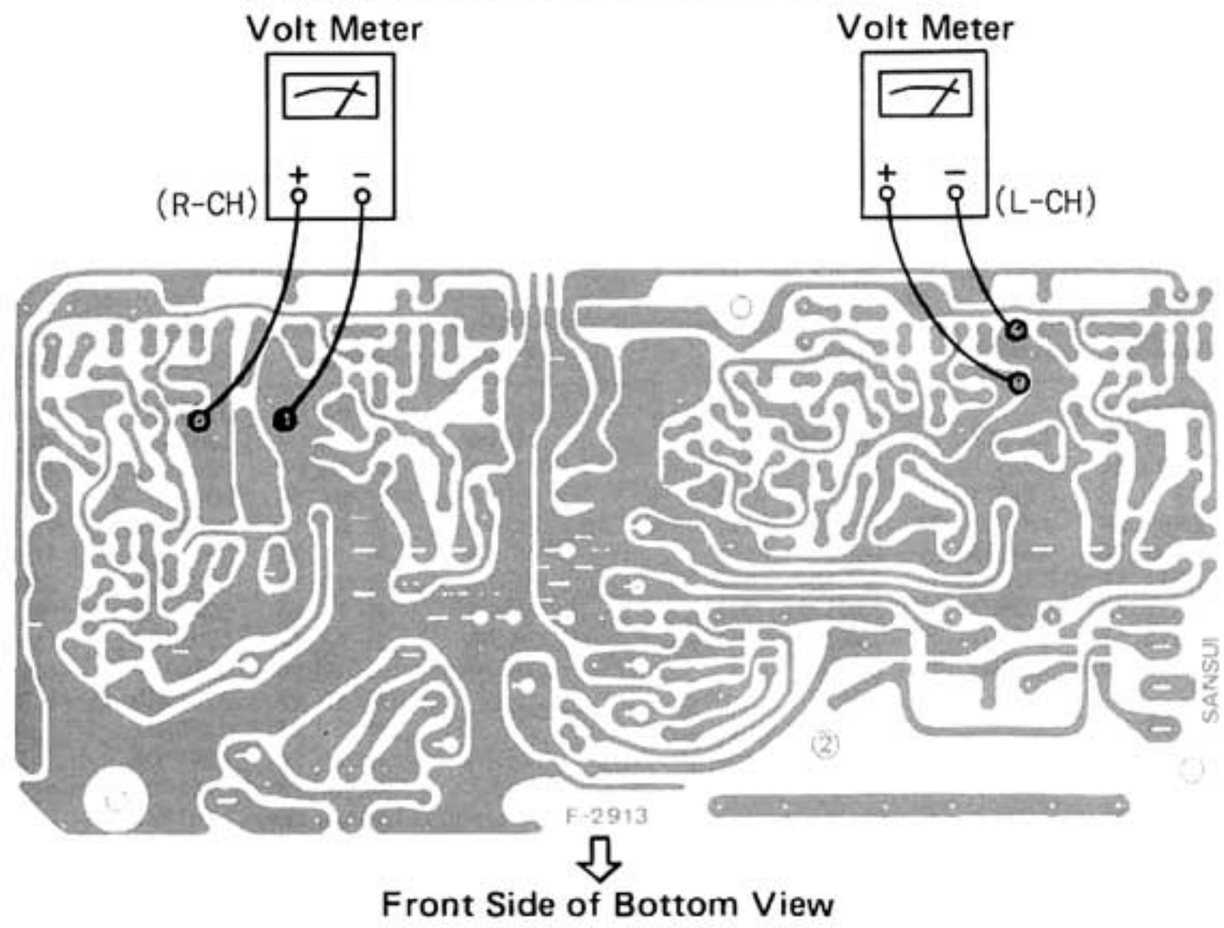

3. PARTS LOCATION & PARTS LIST

Since some of capacitors and resistors are omitted from parts lists in this Service Manual, refer to the Common Parts List for capacitors & resistors which was appended previously to each Sansui Manual.

3-1. F-2915 Power Supply & Protector Circuit (Stock No. 7503131)

Conductor Side

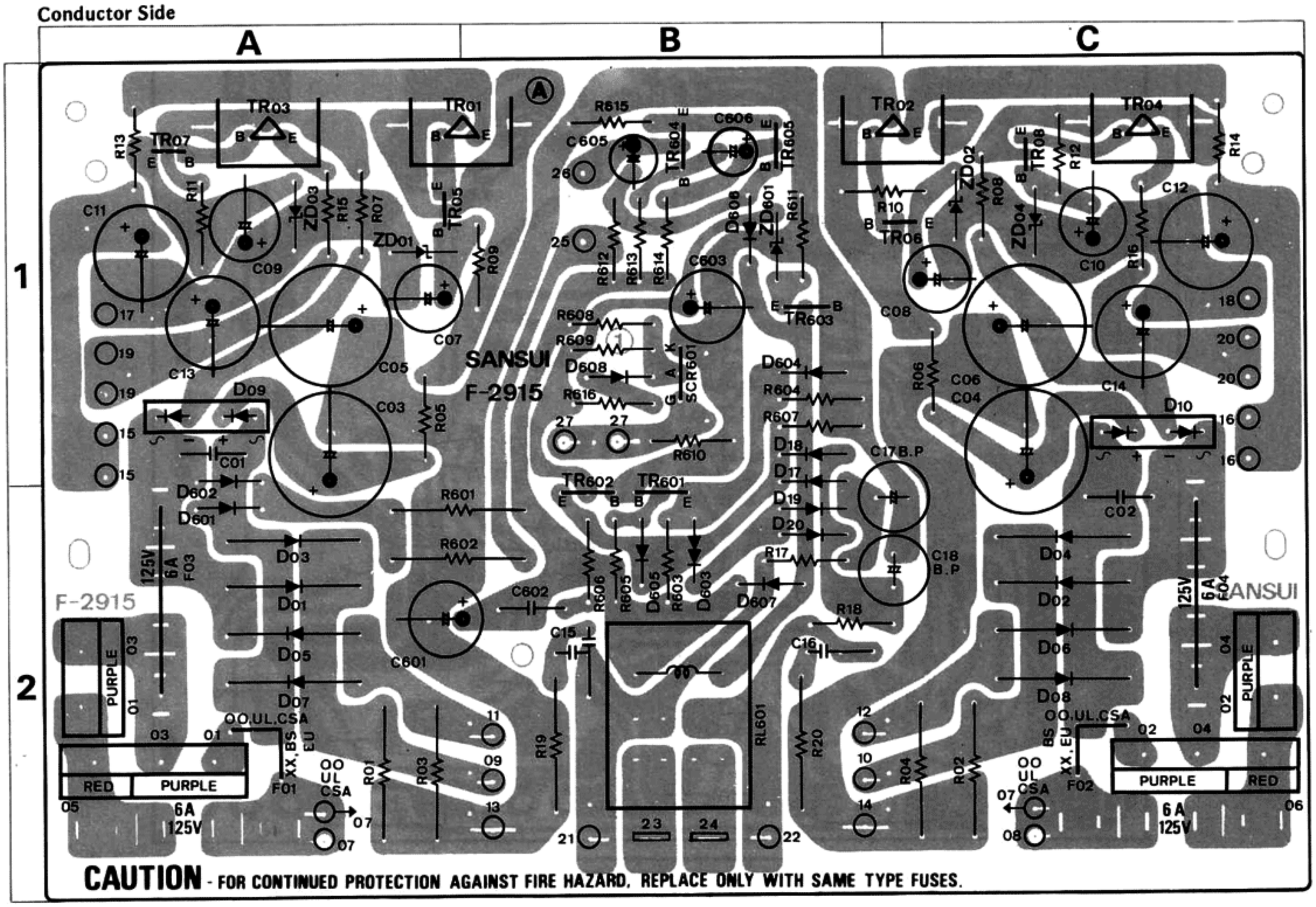

Parts List

Parts No.	Stock No.	Description	Position
•Transistors			
TR01, 02	0308451, 2	2SD356 D, E	1A, B, 1B, C
TR03, 04	0303281, 2	2SB526 D, E	1A, 1C
TR05, 06	0306071, 2	2SC1313 G, H	1A, 1C
TR07, 08	0300470, 1	2SA726 F, G	1A, 1C
TR601	0305951, 2	2SC945 Q, P	2B
TR602	0305951, 2	2SC945 Q, P	2B
TR603	0305952	2SC945 K	1B
TR604	0305951, 2	2SC945 Q, P	1B
TR605	0305951, 2	2SC945 Q, P	1B
•Diodes			
D 01, 02	0311530	30D2	2A, 2C
D 03, 04	0311530	30D2	2A, 2C
D 05, 06	0311530	30D2	2A, 2C
D 07, 08	0311530	30D2	2A, 2C
D 09, 10	0311700	RB-152	1A, 1C
D 17, 18	0311160	1S2473D	1B
D 19, 20	0311160	1S2473D	2B
D 601	0310350	10D2	2A
D 602	0310350	10D2	1A
D 603	0340150	MV-12	2B
D 604	0311160	1S2473D	1B
D 605	0311160	1S2473D	2B
D 606	0311160	1S2473D	1B
D 607	0310340	10D1	2B
D 608	0311160	1S2473D	1B
•Zener Diodes			
ZD01, 02	0316570	RD33E B	1A, 1C
ZD03, 04	0316570	RD33E B	1A, 1C
ZD601	0316390	RD6.2E B	1B
•SCR			
SCR601	0350020	2SF656	1B
C 01, 02	0606108	0.1μF DC250V	1A, 2C
R 01, 02	0212272	2.7kΩ 2W N.I.R.	2A, 2C
R 03, 04	0312272	2.7kΩ 2W N.I.R.	2A, 2C
R 05, 06	0210101	100Ω 1/2W N.I.R.	1A, 1C
R 07, 08	0210101	100Ω 1/2W N.I.R.	1A, 1C
R 09, 10	0280103	10kΩ 1/3W C.R.	1B, 1B, C
R 11, 12	0280103	10kΩ 1/3W C.R.	1A, 1C
R 13, 14	0280689	6.8Ω 1/3W C.R.	1A, 1C
R 15, 16	0280689	6.8Ω 1/3W C.R.	1A, 1C
R 17, 18	0280223	22kΩ 1/3W C.R.	2B
R 19, 20	0212100	10Ω 1/3W N.I.R.	2B
R 601	0212391	390Ω 2W N.I.R.	2A, B
R 602	0212222	2.2kΩ 2W N.I.R.	2A, B
R 603	0280474	470kΩ 1/3W C.R.	2B
R 604	0280334	330kΩ 1/3W C.R.	1B
R 605	0280104	100kΩ 1/3W C.R.	2B
R 606	0280104	100kΩ 1/3W C.R.	2B
R 607	0280393	39kΩ 1/3W C.R.	1B
R 608	0280472	4.7kΩ 1/3W C.R.	1B
R 609	0280623	62kΩ 1/3W C.R.	1B
R 610	0280102	1kΩ 1/3W C.R.	1B
R 611	0280473	47kΩ 1/3W C.R.	1B
R 612	0280104	100kΩ 1/3W C.R.	1B
R 613	0280104	100kΩ 1/3W C.R.	1B
R 614	0280822	8.2kΩ 1/3W C.R.	1B
R 615	0280121	120Ω 1/3W C.R.	1B
R 616	0280330	33Ω 1/3W C.R.	1B
RL601	1150480	Relay	2B
F01 ~ 04	0432300	AC Fuse 6A 250V	2A, 2C

Abbreviations

C.R.	: Carbon Resistor	**E.C.**	: Electrolytic Capacitor
S.R.	: Solid Resistor	**BP.E.C.**	: Bi-Polar Electrolytic Capacitor
Ce.R.	: Cement Resistor	**C.C.**	: Ceramic Capacitor
M.R.	: Metal Film Resistor	**Mi.C.**	: Mica Capacitor
F.R.	: Fusing Resistor	**O.C.**	: Oil Capacitor
N.I.R.	: Non-Inflammable Resistor	**P.C.**	: Polystyrene Capacitor
M.C.	: Mylar Capacitor	**T.C.**	: Tantalum Capacitor

3-2. F-2926 Driver Amp Circuit Board (L-CH) (Stock No. 7572091)

3-3. F-2927 Driver Amp Circuit Board (R-CH) (Stock No. 7572101)

Conductor Side

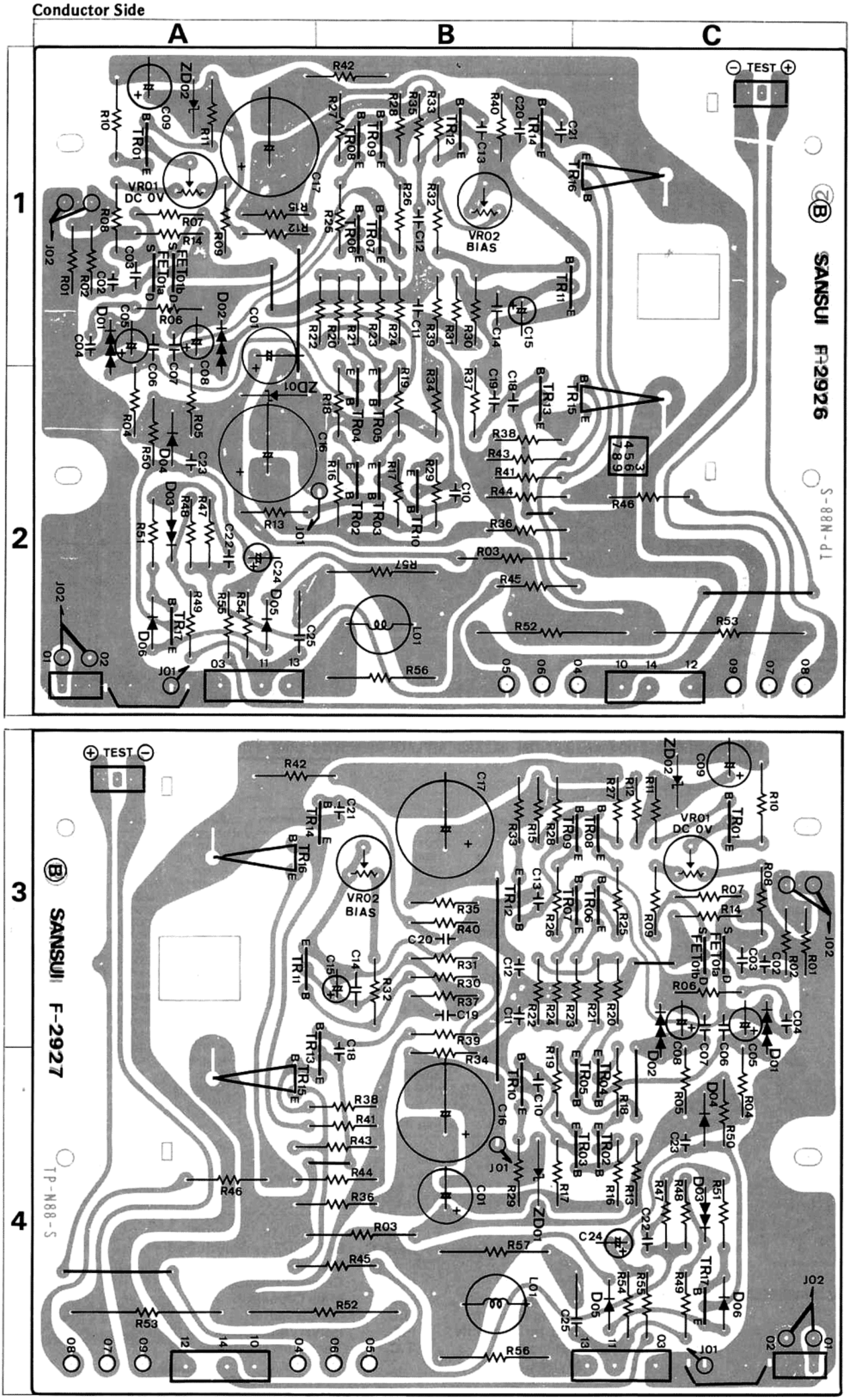

Parts List

Parts No.	Stock No.	Description	Position F-2926	Position F-2927
•Transistors				
TR01	0306680,1	2SC2071 B,V	1A	3C
TR02	0306740,1	2SC1845 F,E	2B	4C
TR03	0306740,1	2SC1845 F,E	2B	4C
TR04	0306740,1	2SC1845 F,E	2B	4C
TR05	0306740,1	2SC1845 F,E	2B	4C
TR06	0301090,1	2SA992 F,E	1B	3C
TR07	0301090,1	2SA992 F,E	1B	3C
TR08	0301090,1	2SA992 F,E	1B	3C
TR09	0301090,1	2SA992 F,E	1B	3C
TR10	0301030,1	2SA939 B,V	2B	4B
TR11	0305951,2	2SC945 Q,P	1B	3A
TR12	0306680	2SC2071 B,V	1B	3B
TR13	0306680,1	2SC2071 B,V	2B	4B
TR14	0301030,1	2SA939 B,V	1B	3B
TR15	0308441,2	2SD382 M,L	2C	4A
TR16	0303271,2	2SB537 M,L	1C	3A
TR17	0306740,1	2SC1845 F,E	2A	4C
•FET				
FET	0370311,2	2SK129 L,M	1A	3C
•Diodes				
D 01	0340170	MV-103	1A	3C
D 02	0340170	MV-103	1A	3C
D 03	0340150	MV-12	2A	4C
D 04	0310400	1N34A	2A	4C
D 05	0311160	1S2473D	2A	4C
D 06	0311160	1S2473D	2A	4C
•Zener Diodes				
ZD01	0317190	RD-27F B	2A	4B
ZD02	0316310	RD-13E B	1A	3C
C 02	0622101	100pF 125V P.C.	1A	3C
C 03	0623220	22pF 125V P.C.	1A	3C

Parts No.	Stock No.	Description	Position F-2926	Position F-2927
C 04	0622681	680pF 125V P.C.	1A	3C
C 10	0669503	3pF 50V C.C.	2B	4B
C 11	0669503	3pF 50V C.C.	1B	3B
C 12	0669503	3pF 50V C.C.	1B	3B
C 13	0669503	3pF 50V C.C.	1B	3B
C 25	0681014	0.047μF 400V P.C.	2A	4C
R 01	0280563	56kΩ 1/3W C.R.	1A	3C
R 02	0280681	680Ω 1/3W C.R.	1A	3C
R 03	0212182	1.8kΩ 2W N.I.R.	2B	4B
R 04	0231392	3.9kΩ 1/2W M.R.	2A	4C
R 05	0231392	3.9kΩ 1/2W M.R.	2A	4C
R 06	0280471	470Ω 1/3W C.R.	1A	3C
R 07	0280101	100Ω 1/3W C.R.	1A	3C
R 08	0280101	100Ω 1/3W C.R.	1A	3C
R 10	0210182	1.8kΩ 1/2W N.I.R.	1A	3C
R 11	0280472	4.7kΩ 1/3W C.R.	1A	3C
R 12	0210472	4.7kΩ 1/2W N.I.R.	1A	3C
R 13	0280101	100Ω 1/3W C.R.	2A	4C
R 14	0280431	430Ω 1/3W C.R.	1A	3C
R 15	0280101	100Ω 1/3W C.R.	1A	3B
R 16	0280821	820Ω 1/3W C.R.	2B	4B
R 17	0280821	820Ω 1/3W C.R.	2B	4B
R 18	0280101	100Ω 1/3W C.R.	2B	4C
R 19	0280101	100Ω 1/3W C.R.	2B	4B
R 20	0280151	150Ω 1/3W C.R.	1B	3C
R 21	0280151	150Ω 1/3W C.R.	1B	3C
R 22	0280220	22Ω 1/3W C.R.	1B	3B
R 23	0280151	150Ω 1/3W C.R.	1B	3C
R 24	0280151	150Ω 1/3W C.R.	1B	3B
R 25	0280101	100Ω 1/3W C.R.	1B	3C
R 26	0280101	100Ω 1/3W C.R.	1B	3B
R 27	0280821	820Ω 1/3W C.R.	1B	3C
R 28	0280821	820Ω 1/3W C.R.	1B	3B
R 29	0280121	120Ω 1/3W C.R.	2B	4B
R 30	0280562	5.6kΩ 1/3W C.R.	1B	3B

Parts No.	Stock No.	Description	Position F-2926	Position F-2927
R 31	0280560	56Ω 1/3W C.R.	1B	3B
R 32	0280102	1kΩ 1/3W C.R.	1B	3B
R 33	0280121	120Ω 1/3W C.R.	1B	3B
R 34	0280393	39kΩ 1/3W C.R.	2B	4B
R 35	0280393	39kΩ 1/3W C.R.	1B	3B
R 36	0210330	33Ω 1/2W N.I.R.	2B	4B
R 37	0280391	390Ω 1/3W C.R.	2B	3B
R 38	0280561	560Ω 1/3W C.R.	2B	4B
R 39	0280103	10kΩ 1/3W C.R.	1B	3B
R 40	0280391	390Ω 1/3W C.R.	1B	3B
R 41	0280561	560Ω 1/3W C.R.	2B	4B
R 42	0210330	33Ω 1/2W N.I.R.	1B	3A
R 43	0210560	56Ω 1/2W N.I.R.	2B	4B
R 44	0210560	56Ω 1/2W N.I.R.	2B	4B
R 45	0210479	4.7Ω 1/2W N.I.R.	2B	4B
R 46	0210479	4.7Ω 1/2W N.I.R.	2C	4A
R 47	0280104	100kΩ 1/3W C.R.	2A	4C
R 48	0280223	22kΩ 1/3W C.R.	2A	4C
R 49	0280393	39kΩ 1/3W C.R.	2A	4C
R 50	0280822	8.2kΩ 1/3W C.R.	2A	4C
R 51	0280680	68Ω 1/3W C.R.	2A	4C
R 52	0159140	0.33Ω 5W Ce.R.	2B,C	4B
R 53	0159140	0.33Ω 5W Ce.R.	2C	4A
R 54	0280823	82kΩ 1/3W C.R.	2A	4C
R 55	0280222	2.2kΩ 1/3W C.R.	2A	4C
R 56	0212109	1Ω 2W N.I.R.	2B	4B
R 57	0212100	10Ω 2W N.I.R.	2B	4B
L 01	4290370	1μH	2B	4B
VR01	1033570	100Ω B 2.5x2 Center DC 0V Volume	1A	3C
VR02	1035290	470Ω B Bias Current Volume	1B	3B
	2411360	Volume 3P Plug		

3-4. F-2913 Tone Control AMP Circuit Board (Stock No. 7562601)

Conductor Side

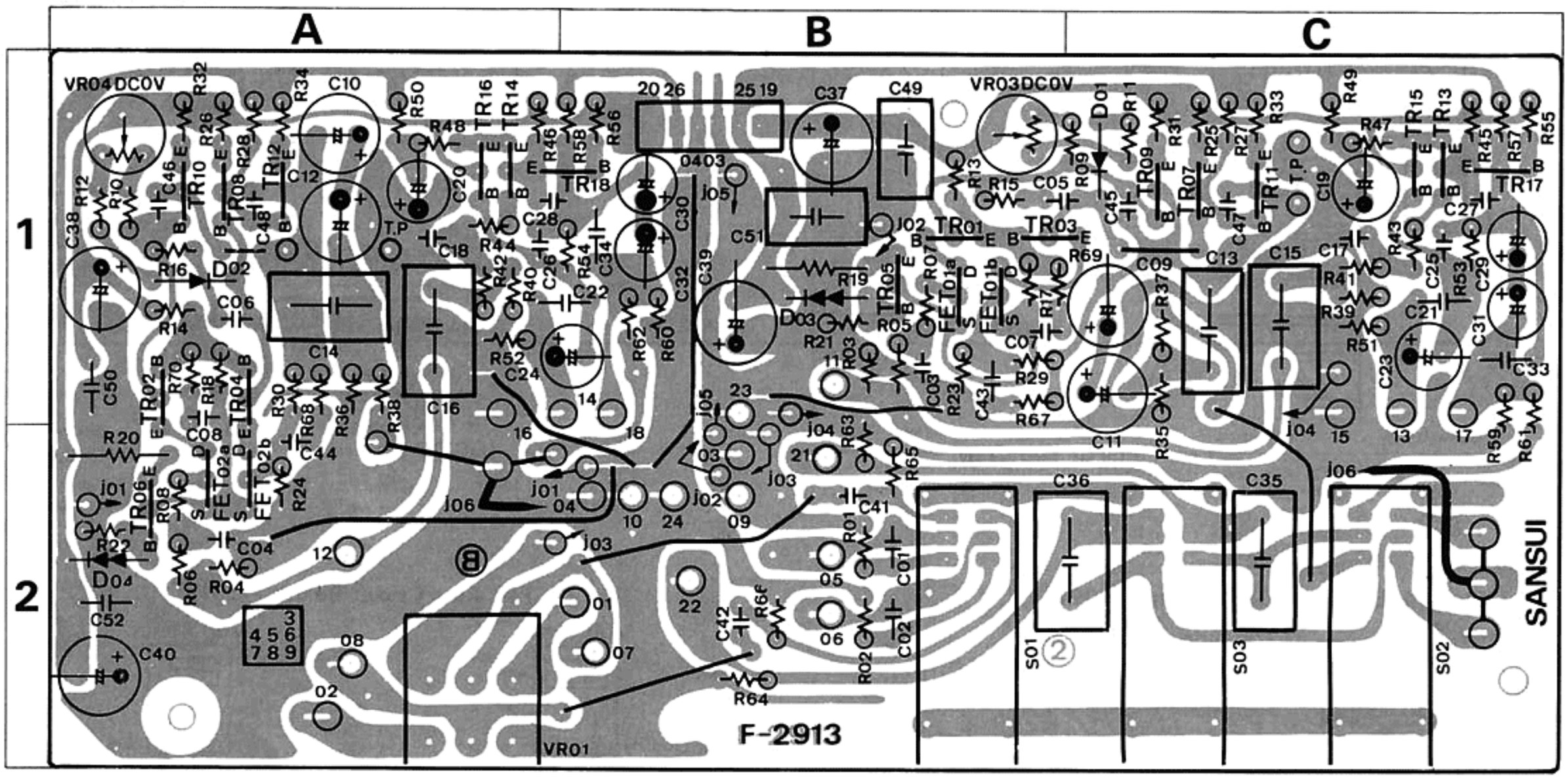

Parts List

Parts No.	Stock No.	Description	Position
•Transistors			
TR01,02	0306071,2	2SC1313 G,H	1B,1A
TR03,04	0306071,2	2SC1313 G,H	1B,1A
TR05,06	0306740,1	2SC1845 F,E	1B,2A
TR07,08	0301090,1	2SA992 F,E	1C,1A
TR09,10	0301090,1	2SA992 F,E	1C,1A
TR11,12	0306740,1	2SC1845 F,E	1C,1A
TR13,14	0306071,2	2SC1313 G,H	1C,1A
TR15,16	0306071,2	2SC1313 G,H	1C,1A
TR17,18	0301090,1	2SA992 F,E	1C,1A,B
•FET			
FET01,02	0370311,2	2SK129 L,M	1B,2A
•Diodes			
D 01,02	0311160	1S2473D	1C,1A
D 03,04	0340150	MV-12	1B,2A
C 05,06	0622471	470pF 125V P.C.	1B,C,1A
C 41,42	0622621	620pF 125V P.C.	2B
C 45,46	0669502	2pF 50V C.C.	1C,1A
C 47,48	0669502	2pF 50V C.C.	1C,1A

Parts No.	Stock No.	Description	Position
R 01,02	0281153	15kΩ 1/3W C.R.	2B
R 03,04	0281684	680kΩ 1/3W C.R.	2A
R 05,06	0281471	470Ω 1/3W C.R.	1B,2A
R 07,08	0281101	100Ω 1/3W C.R.	1B,2A
R 09,10	0281102	1kΩ 1/3W C.R.	1C,1A
R 11,12	0281102	1kΩ 1/3W C.R.	1C,1A
R 13,14	0281223	22kΩ 1/3W C.R.	1B,1A
R 15,16	0281102	1kΩ 1/3W C.R.	1B,1A
R 17,18	0281103	10kΩ 1/3W C.R.	1B,1A
R 19,20	0210121	120Ω 1/2W C.R.	1B,2A
R 21,22	0281682	6.8kΩ 1/3W C.R.	1B,2A
R 23,24	0281392	3.9kΩ 1/3W C.R.	1B,2A
R 25,26	0281102	1kΩ 1/3W C.R.	1C,1A
R 27,28	0281102	1kΩ 1/3W C.R.	1C,1A
R 29,30	0281223	22kΩ 1/3W C.R.	1B,1A
R 31,32	0281391	390Ω 1/3W C.R.	1C,1A
R 33,34	0281391	390Ω 1/3W C.R.	1C,1A
R 35,36	0281104	100kΩ 1/3W C.R.	1C,1A
R 37,38	0281221	220Ω 1/3W C.R.	1C,1A
R 39,40	0281564	560kΩ 1/3W C.R.	1C,1A
R 41,42	0281471	470Ω 1/3W C.R.	1C,1A
R 43,44	0281101	100Ω 1/3W C.R.	1C,1A

Parts No.	Stock No.	Description	Position
R 45,46	0281472	4.7kΩ 1/3W C.R.	1C,1A
R 47,48	0281563	56kΩ 1/3W C.R.	1C,1A
R 49,50	0281183	18kΩ 1/3W C.R.	1C,1A
R 51,52	0281274	270kΩ 1/3W C.R.	1C,1A
R 53,54	0281105	1MΩ 1/3W C.R.	1C,1B
R 55,56	0281101	100Ω 1/3W C.R.	1C,1B
R 57,58	0281103	10kΩ 1/3W C.R.	1C,1B
R 59,60	0281104	100kΩ 1/3W C.R.	1C,1B
R 61,62	0281221	220Ω 1/3W C.R.	1C,1B
R 63,64	0281224	220kΩ 1/3W C.R.	2B
R 65,66	0281105	1MΩ 1/3W C.R.	2B
R 67,68	0281682	6.8kΩ 1/3W C.R.	1B,1A
R 69,70	0281101	100Ω 1/3W C.R.	1B,1A
VR01	1015170,1	250kΩ M.N. Balance Volume	2A
VR03,04	1035030	220Ω B Center DC Adjust Volume	1B,1A
S 01	1171120	Loudness Switch	2B
S 02	1171130	Tone Switch	2C
S 03	1171120	Subsonic Filter Switch	2C

3-5. F-2910 Equalizer Circuit Board (Stock No. 7551371)

Conductor Side

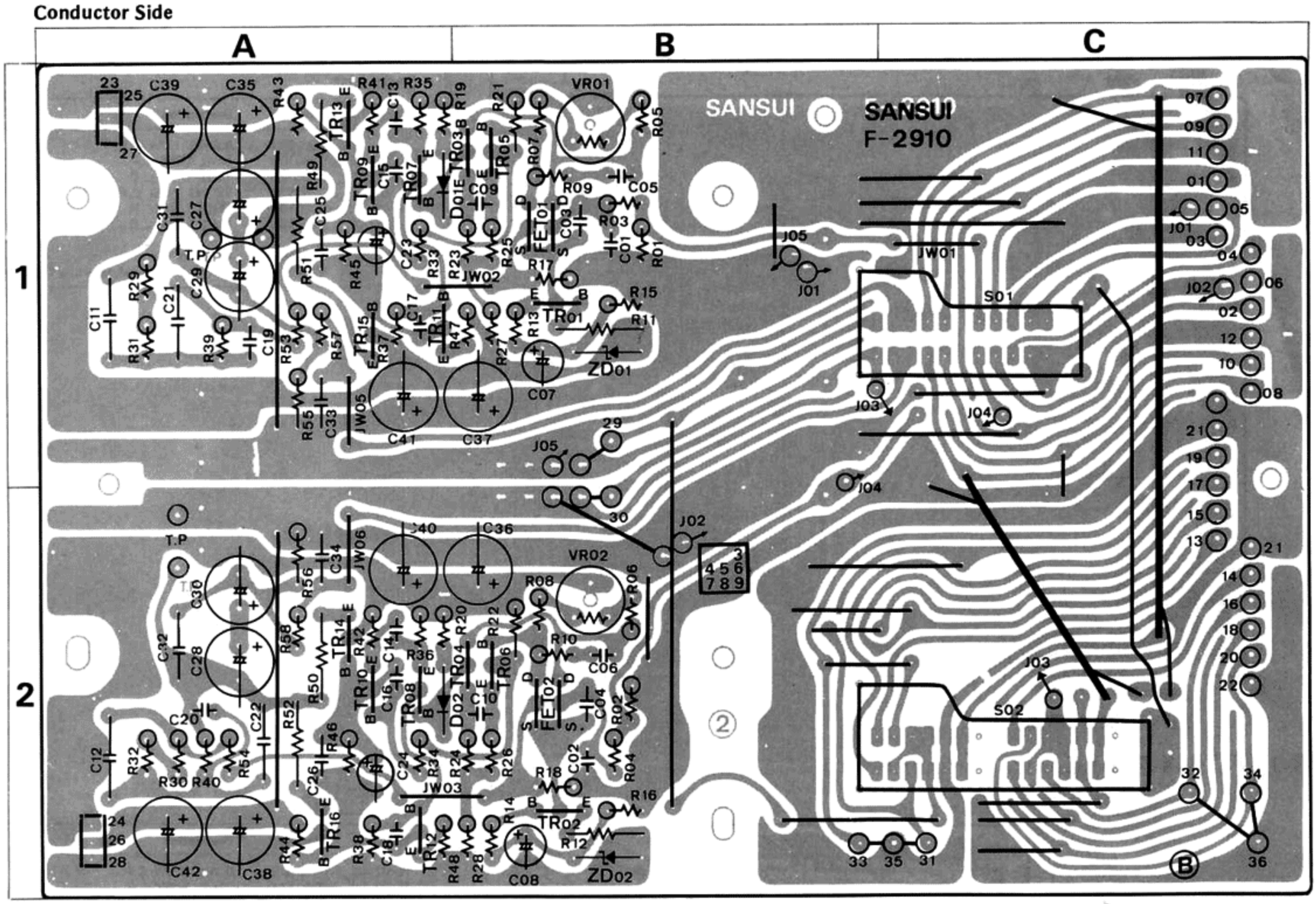

Parts List

Parts No.	Stock No.	Description	Position
•Transistors			
TR01, 02	0306740, 1	2SC1845 F, E	1B,2B
TR03, 04	0306071, 2	2SC1313 G, H	1B,2B
TR05, 06	0306071, 2	2SC1313 G, H	1B,2B
TR07, 08	0301090, 1	2SA992 F, E	1A,2A
TR09, 10	0301090	2SA992 F, E	1A,2A
TR11, 12	0306740, 1	2SC1845 F, E	1A,2A
TR13, 14	0308521, 2	2SD438 F, E	1A,2A
TR15, 16	0303361, 2	2SB560 F, E	1A,2A
•FET			
FET01, 02	0370311, 2	2SK129 L, M	1B,2B
•Diodes			
D 01, 02	0311160	1S2473D	1A,2A
•Zener Diodes			
ZD01, 01	0316320	RD13E C	1B,2B
C 01, 02	0622151	150pF 125V P.C.	1B,2B

Parts No.	Stock No.	Description	Position
C 03, 04	0623220	22pF 125V P.C.	1B,2B
C 05, 06	0622391	390pF 125V P.C.	1B,2B
C 11, 12	0682029	0.056μF 100V M.C.	1A,2A
C 21, 22	0682016	0.016μF 100V M.C.	1A,2A
R 01, 02	0281683	68kΩ 1/3W C.R.	1B,2B
R 03, 04	0281470	47Ω 1/3W C.R.	1B,2B
R 05, 06	0281392	3.9kΩ 1/3W C.R.	1B,2B
R 07, 08	0281392	3.9kΩ 1/3W C.R.	1B,2B
R 09, 10	0281221	220Ω 1/3W C.R.	1B,2B
R 11, 12	0210152	1.5kΩ 1/2W N.I.R.	1B,2B
R 13, 14	0281472	4.7kΩ 1/3W C.R.	1B,2B
R 15, 16	0281472	4.7kΩ 1/3W C.R.	1B,2B
R 17, 18	0231101	100Ω 1/2W M.R.	1B,2B
R 19, 20	0281821	820Ω 1/3W C.R.	1A,2A
R 21, 22	0281821	820Ω 1/3W C.R.	1B,2B
R 23, 24	0281820	82Ω 1/3W C.R.	1B,2B
R 25, 26	0281820	82Ω 1/3W C.R.	1B,2B
R 27, 28	0281153	15kΩ 1/3W C.R.	1B,2B
R 29, 30	0231563	56kΩ 1/2W M.R.	1A,2A

Parts No.	Stock No.	Description	Position
R 31, 32	0231152	1.5kΩ 1/2W M.R.	1A,2A
R 33, 34	0281152	1.5kΩ 1/3W C.R.	1A,2A
R 35, 36	0281821	820Ω 1/3W C.R.	1A,2A
R 37, 38	0281821	820Ω 1/3W C.R.	1A,2A
R 39, 40	0231472	4.7kΩ 1/2W M.R.	1A,2A
R 41, 42	0281151	150Ω 1/3W C.R.	1A,2A
R 43, 44	0281123	12kΩ 1/3W C.R.	1A,2A
R 45, 46	0281561	560Ω 1/3W C.R.	1A,2A
R 47, 48	0281151	150Ω 1/3W C.R.	1B,2A
R 49, 50	0210470	47Ω 1/2W N.I.R.	1A,2A
R 51, 52	0210470	47Ω 1/2W N.I.R.	1A,2A
R 53, 54	0281101	100Ω 1/3W C.R.	1A,2A
R 55, 56	0281104	100kΩ 1/3W C.R.	1A,2A
R 57, 58	0281561	560Ω 1/3W C.R.	1A,2A
R 59, 60	0280152	1.5kΩ 1/3W C.R.	
VR01, 02	1034190	330Ω B Center DC 0V Volume	1B,2B
S 01	1190630	Selector Switch	1C
S 02	1190410	Tape Copy Switch	2C

Note: The circuit boards, F-2989, F-2914, F-2921, F-2912 are not supplied as the assembled, the individual parts on the circuit board, however, are provided for orders.

3-6. F-2989 Input Terminal Circuit Board

Conductor Side

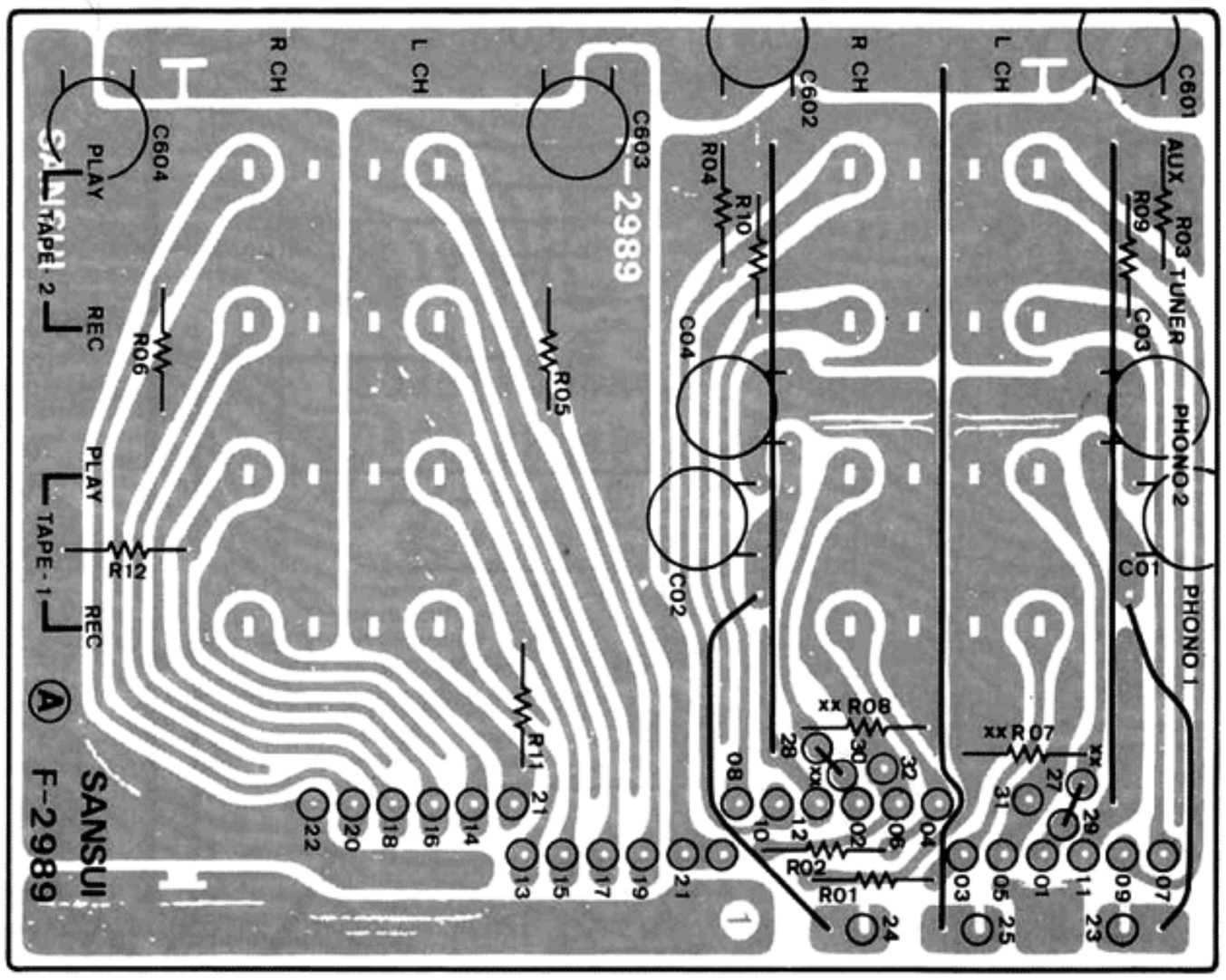

Parts List

Parts No.	Stock No.	Description
R 01, 02	0280824	820kΩ 1/3W C.R.
R 03, 04	0280105	1MΩ 1/3W C.R.
R 05, 06	0280105	1MΩ 1/3W C.R.
R 07, 08	0280824	820kΩ 1/3W C.R.
R 09, 10	0280105	1MΩ 1/3W C.R.
R 11, 12	0280105	1MΩ 1/3W C.R.
	2200580	4P Input Terminal
	2200620	4P Input Terminal, Shorting Type

3-7. F-2914 Tone Control Circuit Board

Conductor Side

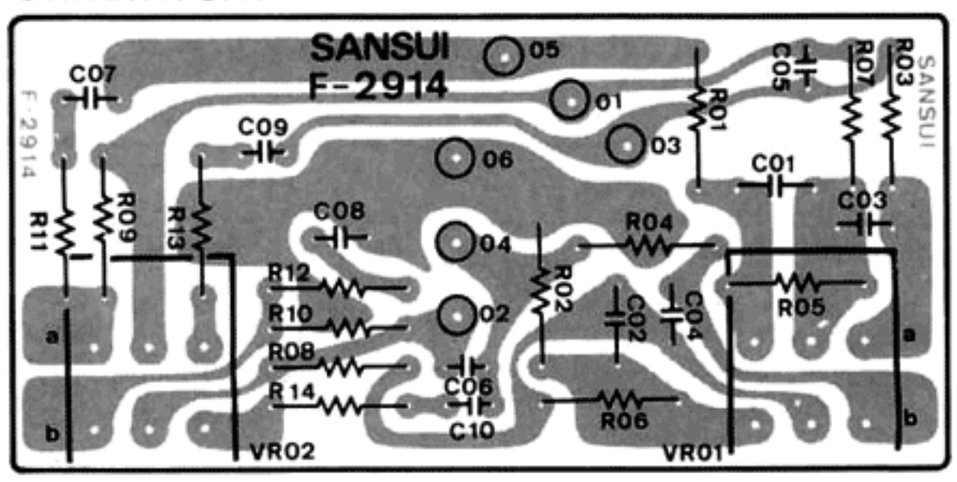

Parts List

Parts No.	Stock No.	Description
R 01, 02	0280392	3.9kΩ 1/3W C.R.
R 03, 04	0280223	22kΩ 1/3W C.R.
R 05, 06	0280393	39kΩ 1/3W C.R.
R 07, 08	0280102	1kΩ 1/3W C.R.
R 09, 10	0280473	47kΩ 1/3W C.R.
R 11, 12	0280102	1kΩ 1/3W C.R.
R 13, 14	0280392	3.9kΩ 1/3W C.R.
VR01, 02	1015230	100kΩ C Tone Control Volume

3-8. F-2921 Tape Play Switch Circuit Board

Conductor Side

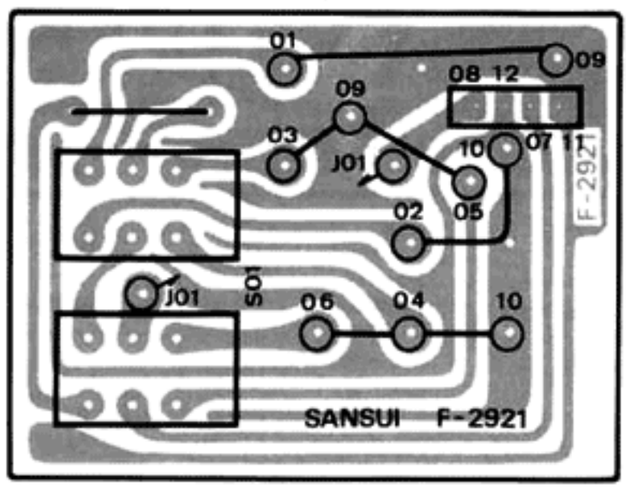

Parts List

Parts No.	Stock No.	Description
S 01	1131400	Tape Play Switch

3-9. F-2912 Pre-Main Terminal Circuit Board

Conductor Side

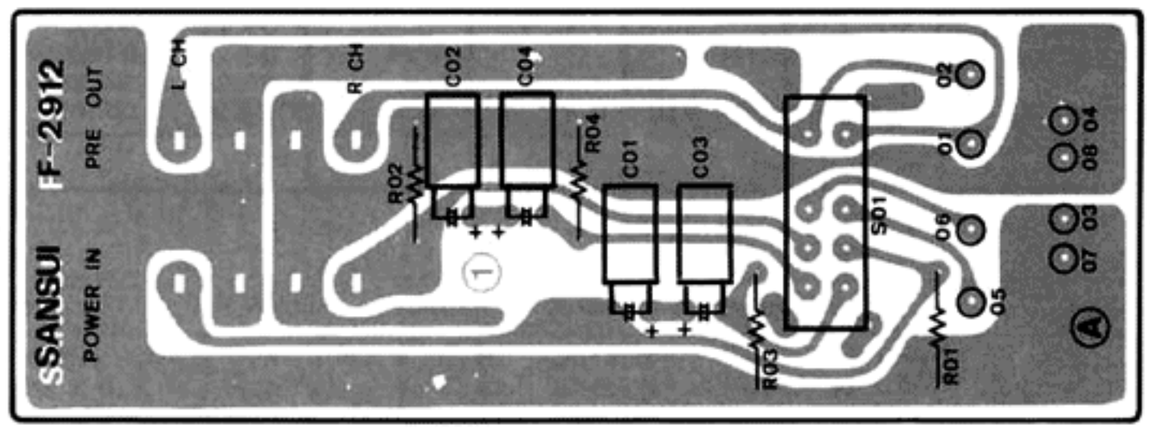

Parts List

Parts No.	Stock No.	Description
R 01, 02	0280105	1MΩ 1/3W C.R.
R 03, 04	0280105	1MΩ 1/3W C.R.
S 01	1110290	Pre-Power Switch
	2200580	4P Input Terminal

- Design and specifications subject to change without notice for improvement.
- La présentation et les spécifications sont susceptibles d'éter modifiées sans préavis par suites d'améliorations éventuelles.
- Änderungen, die dem technischen Fortschritt dienen, bleiben vorbehalten.

4. SCHEMATIC DIAGRAM

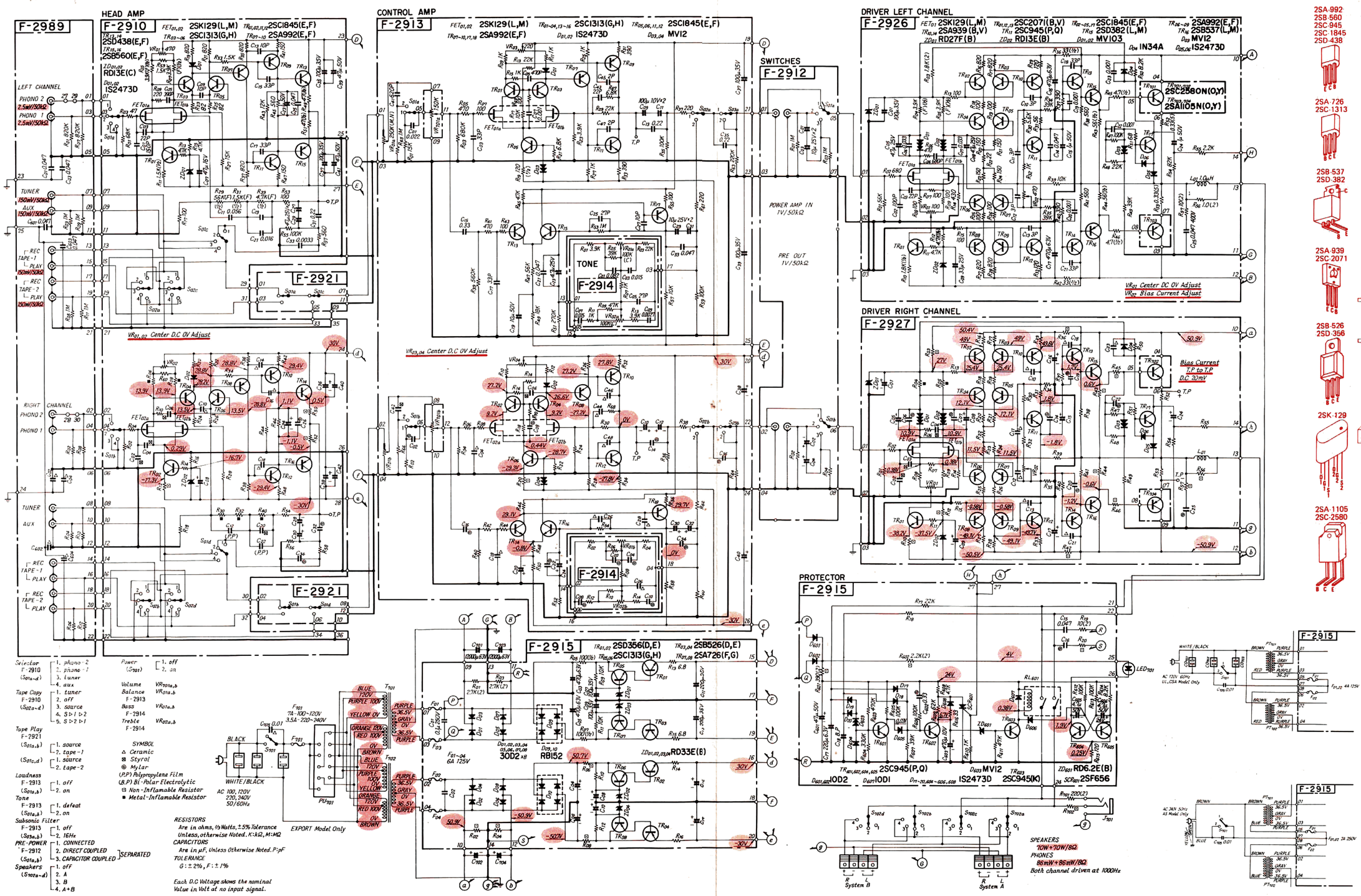

5. OTHER PARTS

5-1. Top View

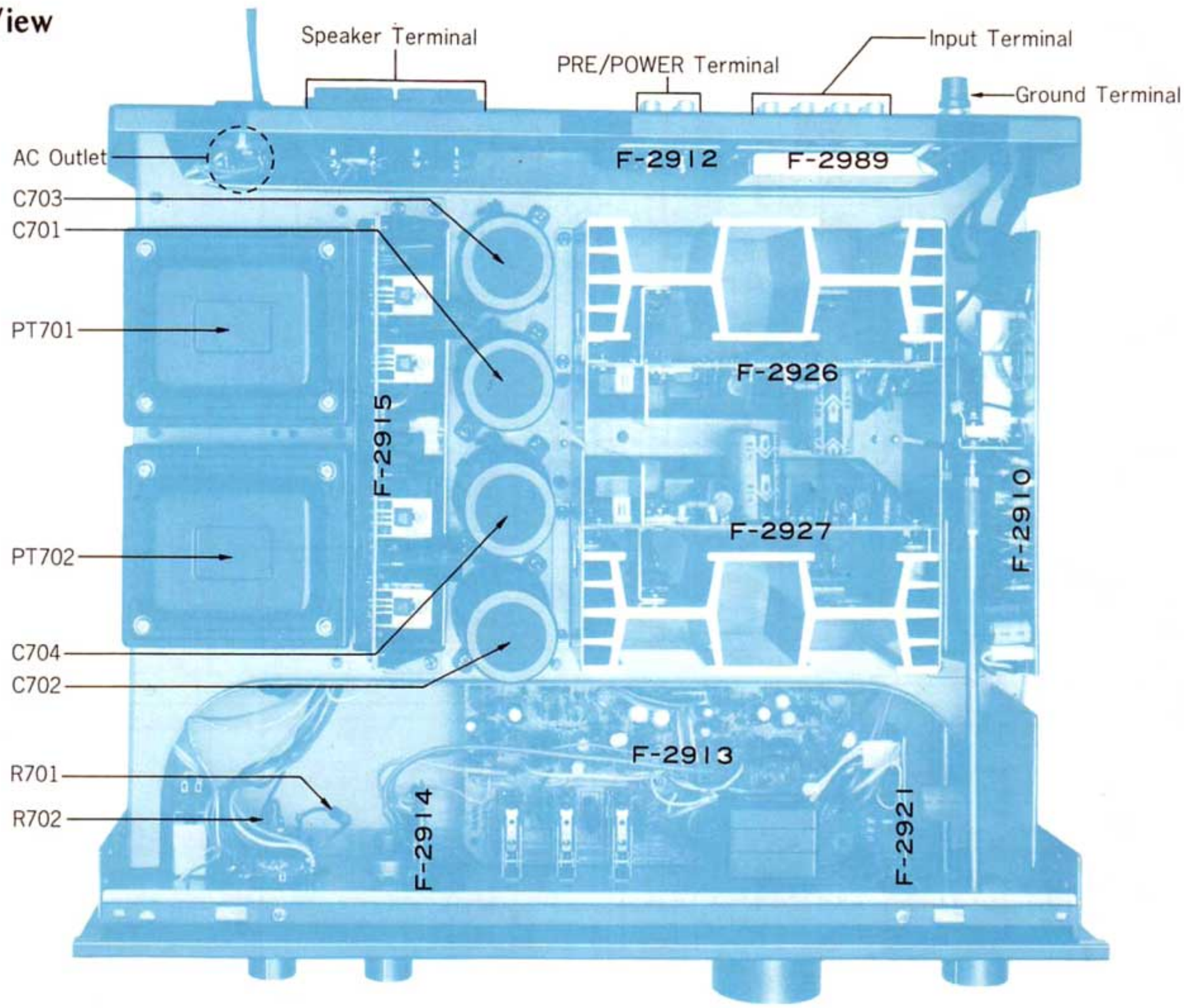

5-2. Bottom View

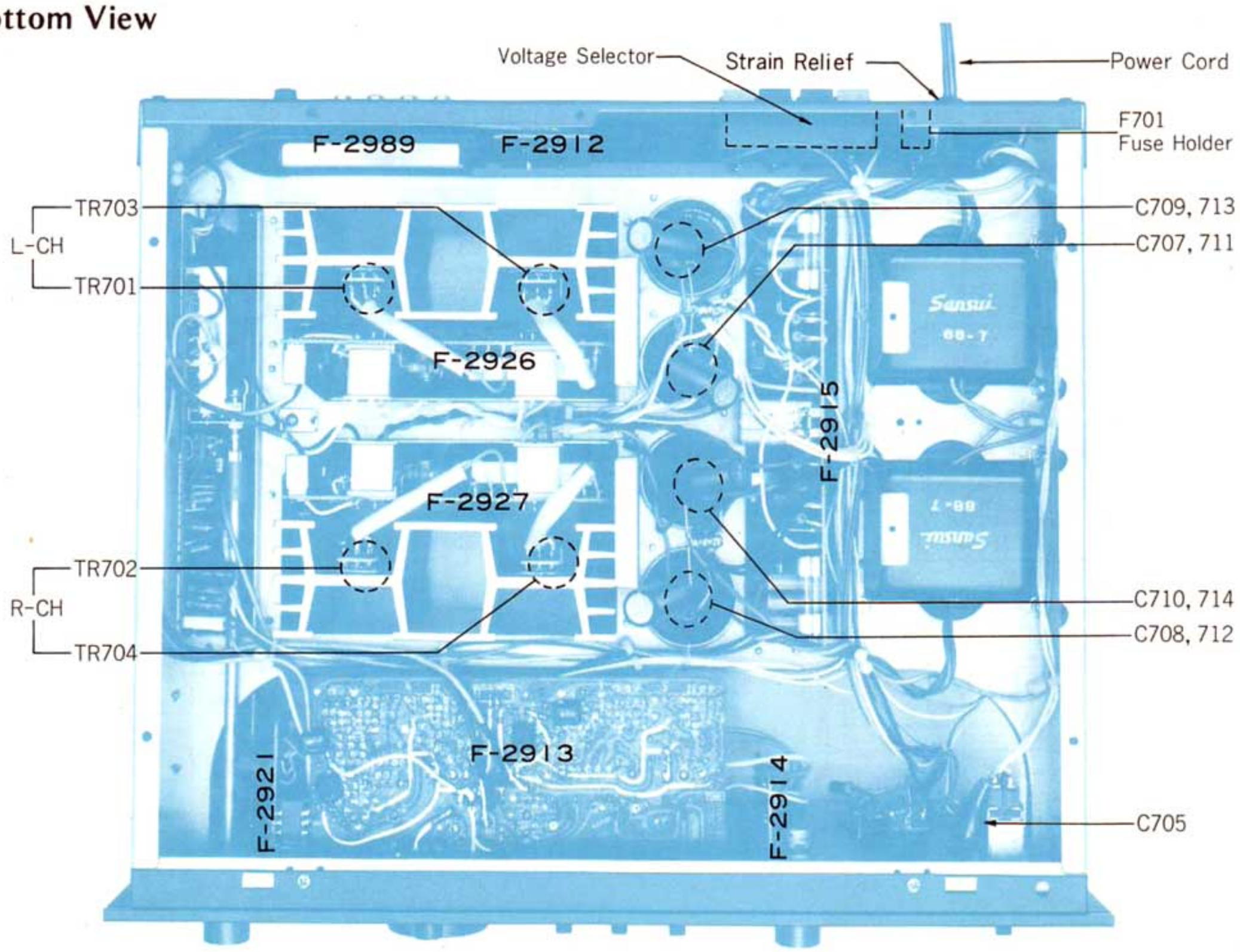

5-3. Front View

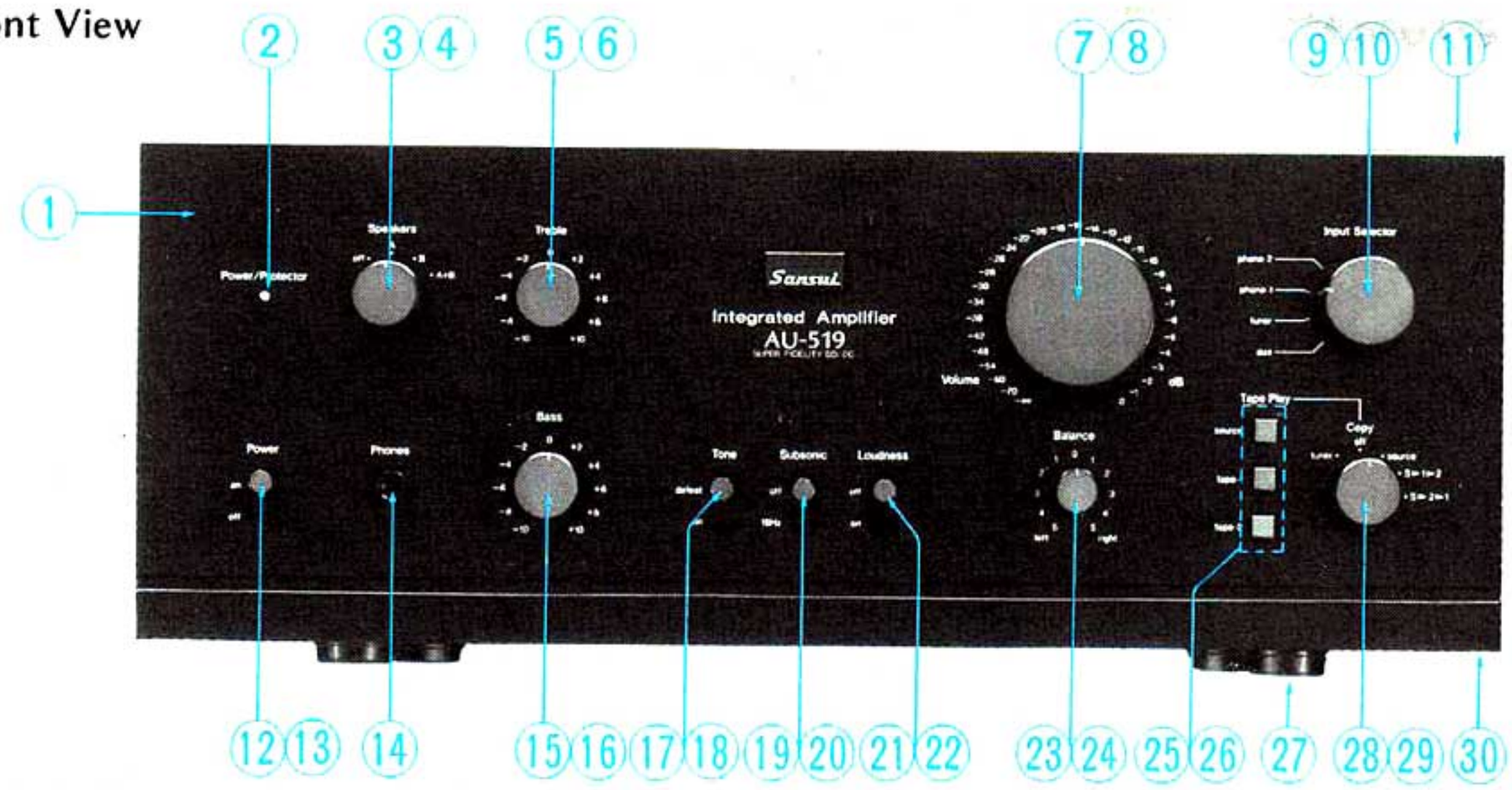

Parts List <Top, Bottom & Front View>

Parts No.	Stock No.	Description
1	7008121	Front Panel Ass'y
26	5048221	Masking Sheet
	5152210	CS Ling
	5286721	Knob Guide
	5326620	Knob, push switch
	5336600	Sansui Badge
	6906480	Spring
2	0319190	Power Indicator
3	1101780, 1	Speakers Switch
4	5318840	Knob, Speakers
5	1015230	Treble Volume, 100kΩ x 2
6	5318840	Knob, treble volume
7	1090450 / 1090430	Volume, 150kΩ x 2
8	5318861	Knob, volume
9	1190630	Input Selector
10	5318830	Knob, input selector
11	5006800	Bonnet
12	1172000	Power Switch
13	5326612	Knob, power switch
14	2430290	Phone Jack
15	1015230	Bass Volume, 100kΩ x 2
16	5318840	Knob, bass volume
17	1171130	Tone Switch
18	5326612	Knob, tone switch
19	1171120	Subsonic Filter Switch
20	5326612	Knob, subsonic filter switch
21	1171120	Loudness Switch
22	5326612	Knob, loudness switch
23	101[illegible]70, 1	Balance Volume, 250kΩ MN
24	5318850	Knob, balance volume
25	1131400	Tape Play Switch
27	5507070	Leg
28	1190410	Copy Switch
29	5318840	Knob, copy switch
30	5058744	Bottom Plate

•Transistors

TR701, 702	0306760, 1	2SC2580NLB O, Y
TR703, 704	0301110, 1	2SA1105NLB O, Y

Parts No.	Stock No.	Description
C 701, 702	0559518	12000μF 63V E.C.
C 703, 704	0559518	12000μF 63V E.C.
C 705	0659801	0.01μF 150V C.C.
R 701, 702	0202221	220Ω 2W N.I.R.
PT 701, 702	4002590	Power Transformer
	3800470	Power Cord
	3910600	Strain Relief
	2450070	AC Outlet
	2230190	Ground Terminal
	2290190	Speaker Terminal Board
F 701	0432270	3.5A 125V (AC220 ~ 240V) AC Fuse
	0432500	7A 125V (AC100 ~ 120V) AC Fuse
	2300060	Fuse Holder
	2410091	6P Voltage Selector, plug
	2410830	10P Voltage Selector, socket

6. PACKING LIST

Parts No.	Stock No.	Description
1	9116790	Vinyl Cover
2	9028350	Styrofoam Packing
3	9001990	Carton Case
4	5996080	Curl Stopper

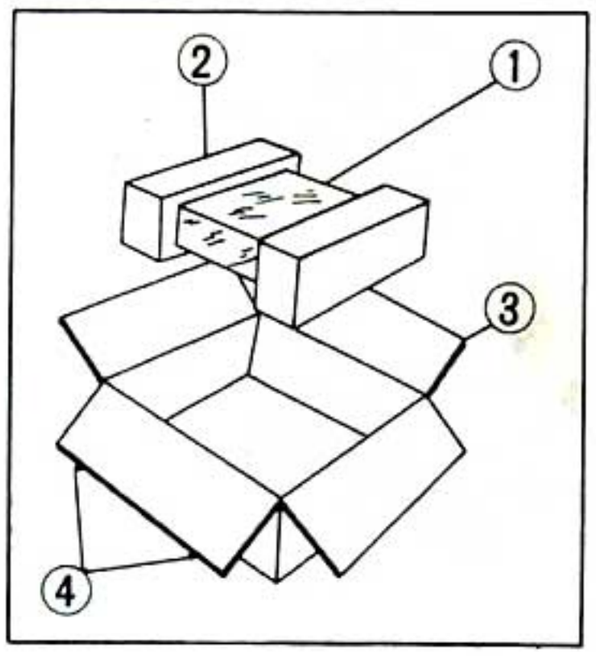

7. ACCESSORY PARTS LIST

	Stock No.	Description
	9204190	Operating Instructions
	9237490	Schematic Diagram
	5396720	Rack-mounting Adaptor (ea.)

Sansui

SANSUI ELECTRONICS CORPORATION: 55-11 Queens Blvd. Woodside, N.Y. 11377 U.S.A.
333 West Alondra Blvd. Gardena, California 90247 U.S.A.
3036 Koapaka St. Honolulu, Hawaii 96819 U.S.A.
SANSUI AUDIO EUROPE N.V.: North Trade Bldg (9th floor) Noorderlaan 133-Bus 1,2030 Antwerp, Belgium
SANSUI AUDIO EUROPE S.A.: Arabella center, 6 Frankfurt AM Main, Lyoner Strasse 44-48, West Germany
SANSUI ELECTRIC COMPANY LTD.: 14-1, Izumi 2-chome, Suginamiku, Tokyo 168 Japan PHONE: (03) 323-1111/TELEX:232-2076

Printed in Japan (190600M)